TCF
Twin City Fan

INDUSTRIAL PROCESS AND
COMMERCIAL VENTILATION SYSTEMS

ROOF VENTILATORS
LOW PROFILE UPBLAST

LUD | LUB | LUBMO | LUBSH

CATALOG 4870 | APRIL 2024

WWW.TCF.COM

Model LUBSH
(Smoke & Heat Low Profile Roof Ventilator)

Overview

LUD I LUB I LUBMO I LUBSH

Twin City Fan & Blower's line of Low Profile Upblast Roof Ventilators provide general exhaust of commercial and light industrial buildings while offering a pleasing low profile design that minimizes extension above the roof line. The upblast design discharges air and contaminants up and away from the building. These ventilators exhaust large volumes of air at low to medium static pressures. Typical applications for upblast roof ventilators include warehouses, shopping centers and manufacturing facilities.

A wide array of fixed pitch, fabricated steel or adjustable pitch, cast aluminum impellers are available to meet specific performances and application requirements. The cost effective design is available in both belt and direct drive configurations. Application flexibility, cost competitiveness and robust design all combine to make Twin City Fan & Blower's LU Series of Low Profile Upblast Roof Ventilators an industry leader.

Typical Industries Include

Warehouse Ventilation, Office Ventilation, General HVAC, Gymnasium Ventilation, Factory Ventilation, Greenhouse Ventilation, Attic Exhaust, Hospital Exhaust, Agriculture, Manufacturing Exhaust, Paper Mills, Foundry, Textile, Commercial Plan & Spec, Office Ventilation

Configurations

Upblast

Impeller Types

"L1" and "L2" Fabricated Steel Impellers; "B" and "E" Die Cast Aluminum Impellers; "C" Cast Aluminum Impellers; "Z" Fabricated Steel Impellers

Standard Construction

Heavy-Gauge Galvanized Steel

Optional Construction

Special Coatings, Aluminum Construction, UL Smoke & Heat

Certifications

UL 705 Listed for Electrical, UL Listed for Smoke Control Systems

Energy Regulations

Twin City Fan & Blower supports energy efficiency regulations enacted by the U.S. Department of Energy (DOE) and specific states. The selection and application of fan products is a significant part of these regulations. Engineers and specifiers must understand how to apply TCF products to their specific applications to meet applicable DOE and state regulatory requirements. Twin City Fan & Blower has made significant investments in product testing and development to provide efficient products. Developments in Twin City Fan & Blower's Fan Selector software are in place to aid your decision in product selection to assist with meeting the efficiency requirements as stipulated in the applicable regulations.

Models LUD, LUB & LUBMO are UL/cUL 705 listed, for electrical, File No. E158680. Model LUBSH is UL/cUL listed for Smoke Control Systems as standard, File No. MH29313, 500°F for 4 hours and 1000°F for 1 hour.

For complete product performance, drawings and available accessories, download our Fan Selector software at *tcf.com*.

Overview

LUD I LUB I LUBMO I LUBSH

Upblast

LUD (Direct Drive)
14" to 48" impeller diameters
Airflow to 34,500 CFM
Static pressure to 1" w.g.

LUB (Belt Driven)
21" to 60" impeller diameters
Airflow to 60,800 CFM
Static pressure to 1" w.g.

LUBMO (Belt Driven)
21" to 60" impeller diameters
Airflow to 60,800 CFM
Static pressure to 1" w.g.

Smoke & Heat Removal

LUBSH (Belt Driven)
21" to 60" impeller diameters
Airflow to 48,000 CFM
Static pressure to 1" w.g.

Temperature Rating
500°F for 4 Hours
1000°F for 1 Hour

TCF
TWIN CITY FAN

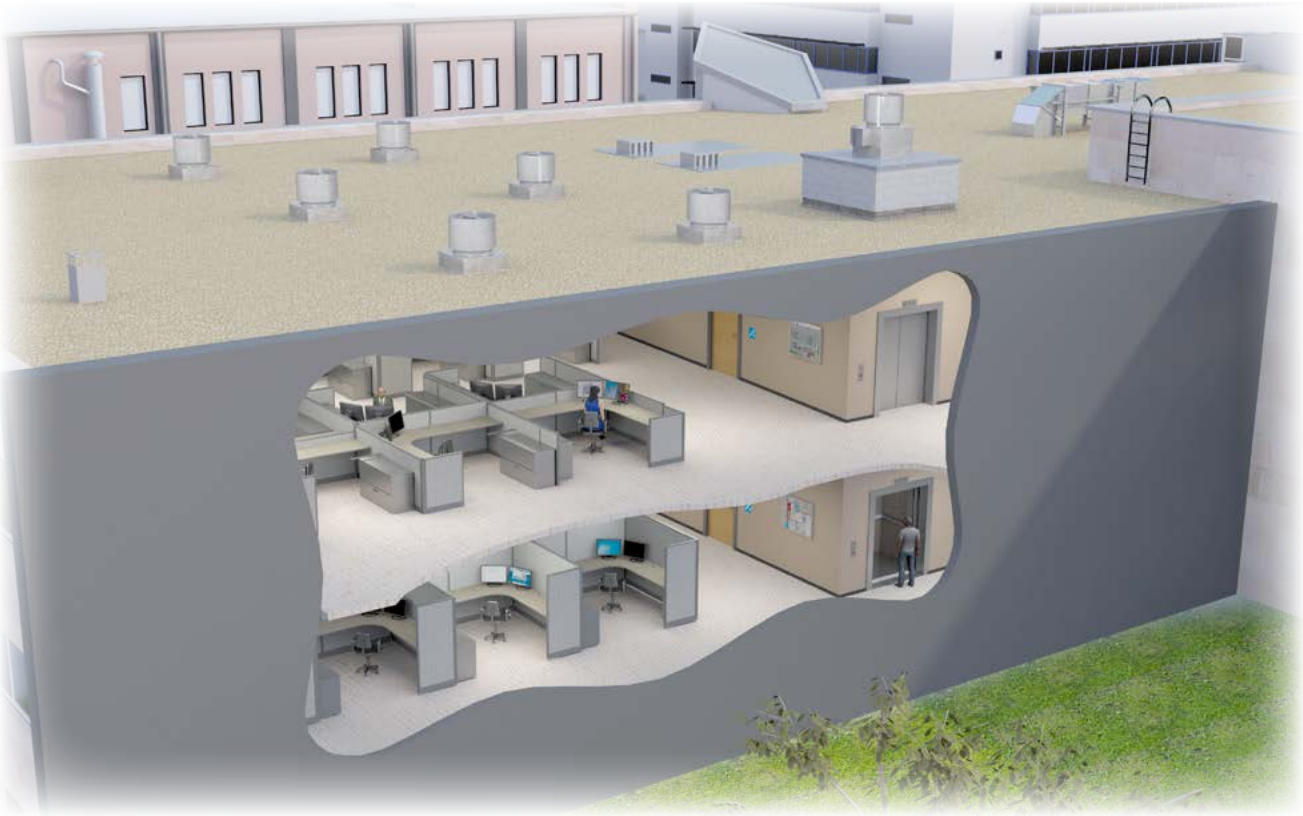

General HVAC (Supply and Exhaust)
Emergency Smoke Contol (Elevator Shaft Exhaust)

Model LUD

LUD
Upblast direct drive model LUD is available for general-purpose exhaust. Direct drive fans are an ideal choice for installations where service and maintenance are made difficult due to limited access. The LUD can save on service costs incurred through sheave, belt and bearing maintenance.

LUB
Standard duty upblast belt driven model LUB is available for use in clean air applications requiring the adjustable performance of a belt drive fan. Motor and drives are located below the fan, inside the roof curb for access from inside the building.

LUBMO
The belt driven LUBMO offers the same performance flexibility as the LUB, but with the motor located out of the airstream for easy inspection and service from the roof. The motor cover is easily removable making the motor and drive components accessible without moving the fan.

LUBSH
The LUBSH is specifically designed for smoke control applications. It is belt driven with the motor located remotely out of the airstream and the bearings and drive components protected from the elevated temperatures of the airstream. It is certified to carry the UL/cUL listing for smoke control systems and was tested for 500°F for 4 hours or 1000°F for 1 hour.

Model LUBSH

TCF
Twin City Fan

Exploded View

LUBMO | LUBSH

Windband
Constructed of heavy-gauge galvanized steel with bolted seams. Reinforcing flange provides rigidity, strength and safe handling. The windband is removable with four bolts, allowing access to the fan through the damper blades.

Butterfly Dampers
Blades constructed of steel as standard, unless the outlet velocity of the fan is below the minimum required to open steel damper blades, then aluminum blades shall be provided. Damper blades on all sizes of model LUBSH are galvanized steel. Butterfly dampers provide weather protection when the fan is not in operation. A rain channel provides for run off of precipitation.

Impellers
Fabricated steel or cast aluminum blades and hubs. Impellers on belt driven units shall be welded to the fan shaft or secured to the fan shaft with a taper lock bushing. Impellers on direct drive units shall be mounted directly on the motor shaft with a taper lock bushing.

Curb Cap
Heavy-gauge galvanized or finish painted steel curb caps are provided with prepunched mounting holes. Curb cap includes venturi inlet for efficient airflow.

Motor and Drive Frame
Support assemblies are constructed of heavy-gauge galvanized or finish painted steel.

Bearings (LUB, LUBMO and LUBSH only)
Cast iron pillow block bearings selected for L-50 average life of 200,000 hours at maximum cataloged operating speeds.

Shaft (LUB, LUBMO and LUBSH only)
Shaft diameters are sized to have a first critical speed of at least 125% of the fan's maximum operating speed.

Motors
ODP, TEFC and Explosion Proof, single- and three-phase motors are carefully matched to the fan load.

TCF
TWIN CITY FAN

Exploded View

LUBMO | LUBSH

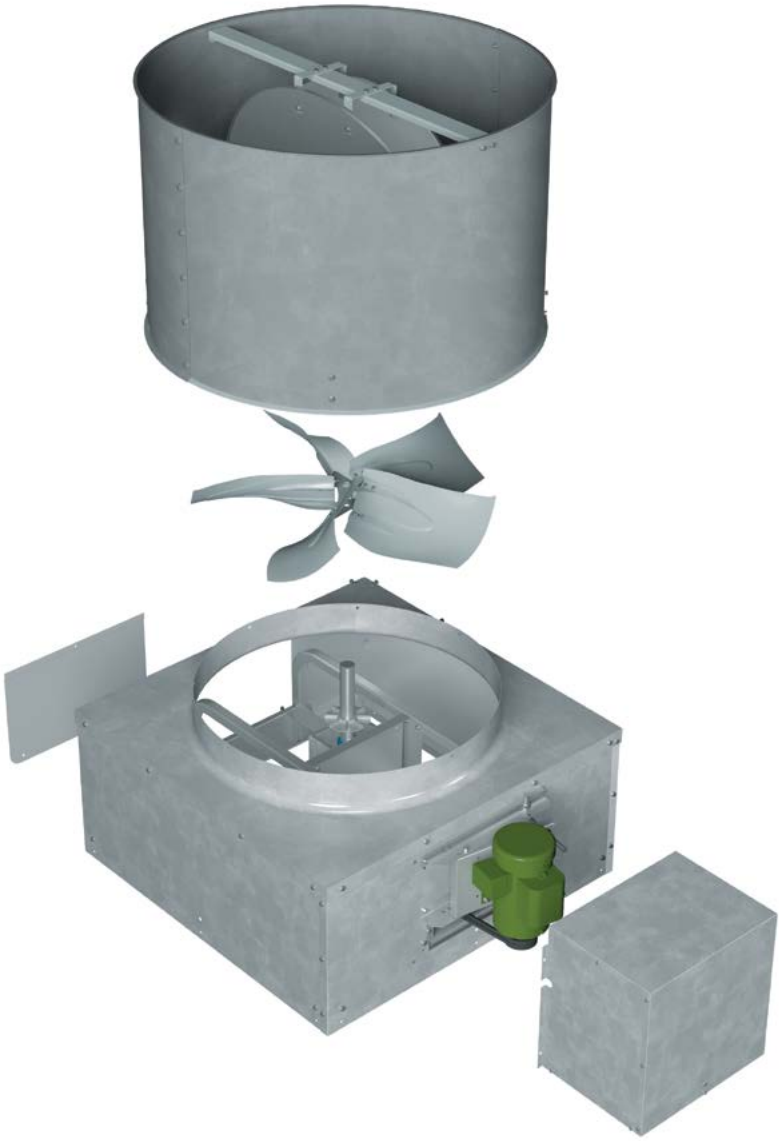

Drives (LUB, LUBMO and LUBSH only)

Drive sheaves shall be of cast iron and supplied as variable pitch as standard. Drives and belts shall be rated for 150% of the required motor HP on all belt driven models. V-belt drives shall be provided with a minimum of two belts on model LUBSH.

Motor Cover (LUBMO and LUBSH only)

An easily removable galvanized steel motor cover is a standard feature of models LUBMO and LUBSH. Allows for easy inspection and service of motor and drives from the roof. Motor cover bottom is enclosed with galvanized steel bird screen.

Access Panel (LUBMO and LUBSH only)

An access panel for service and inspection is located on the housing side opposite the motor on models LUBMO and LUBSH.

Bearing Cover (LUBSH only)

An insulated bearing cover is standard on model LUBSH to protect the bearings from elevated airstream temperatures in smoke and heat/life safety applications.

Shaft Cooler (LUBSH only)

Model LUBSH is supplied with a shaft cooler as standard to draw ambient air in through the motor cover and cool the motor, drives and bearings.

Lifting Lugs

The windband brackets also double as lifting points for the unit.

UL/cUL Listing

Models LUD, LUB and LUBMO are provided as standard with UL/cUL listing for electrical when supplied with specific motors. Model LUBSH is provided with UL/cUL listing for Smoke Control Systems as standard with specific motors. The LUBSH has been rated and tested for 500°F for 4 hours and 1000°F for 1 hour.

Mechanical Run Test & Final Vibration Check

All fans are assembled for a mechanical run test and final balance prior to shipment. Vibration readings are taken on both fan bearings in the axial, horizontal and vertical directions at the specified speed. Fans are balanced to 0.15 in./sec. peak or less.

TCF
Twin City Fan

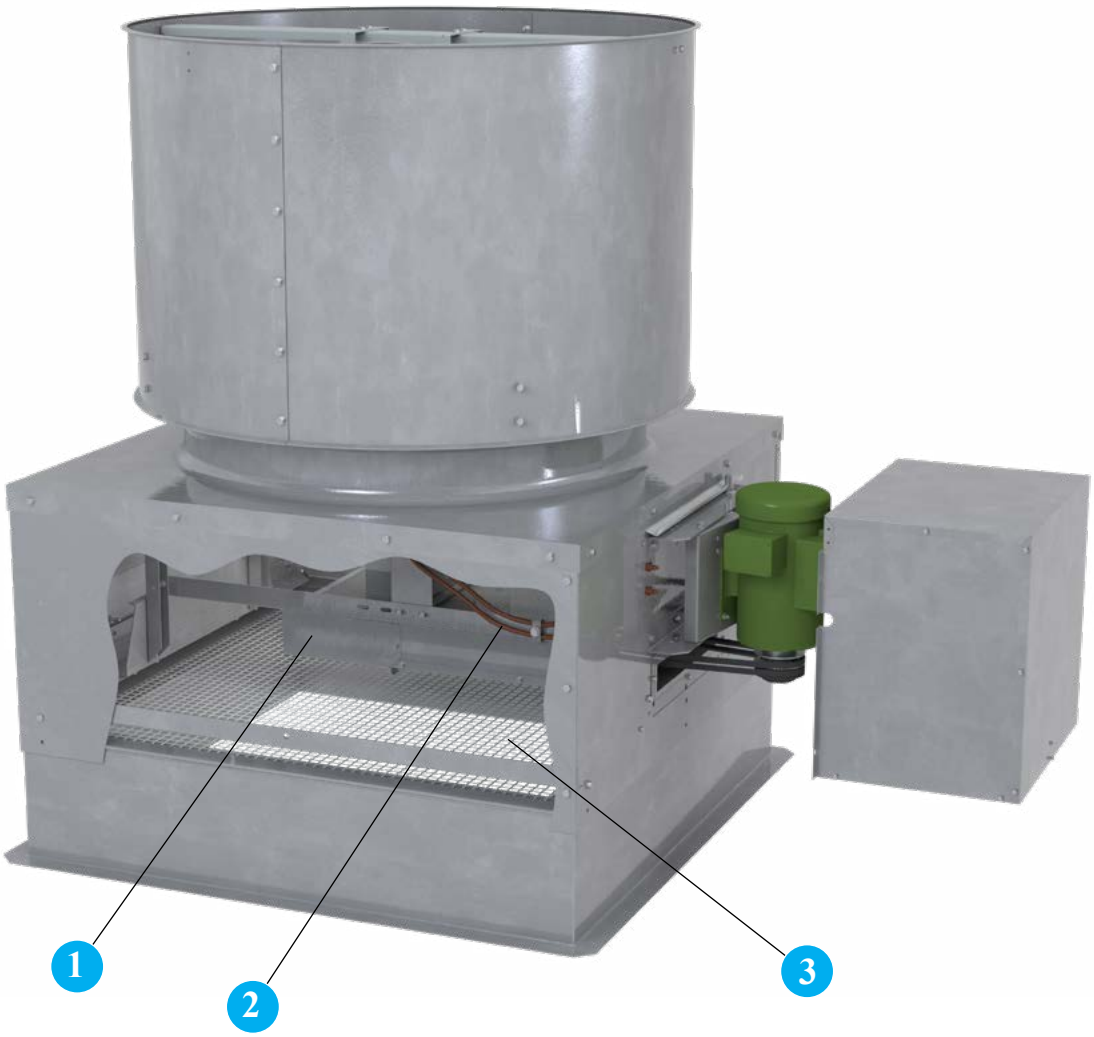

1 **Belt Tube (LUMBO and LUBSH only)** Protects belts from the airstream. This accessory is optional on model LUBMO, but an insulated version is standard on model LUBSH.

2 **Extended Lube Lines** Allow for easy lubrication of bearings on belt driven units without disassembly by extending polyethylene lines from fan bearings to exterior of base.

3 **Flat Type Inlet Safety Guard** A flat style guard to sit between the roof curb and the curb cap is available on models LUBMO and LUBSH. Twin City Fan & Blower recommends the use of an inlet safety screen on all non-ducted installations.

Other Accessories Include:

- Fusible Link Assembly (standard on Model LUBSH)
- Hinged Base
- Aluminum Housing
- Insect Screen
- Special Coatings

OPTIONS/ACCESSORIES

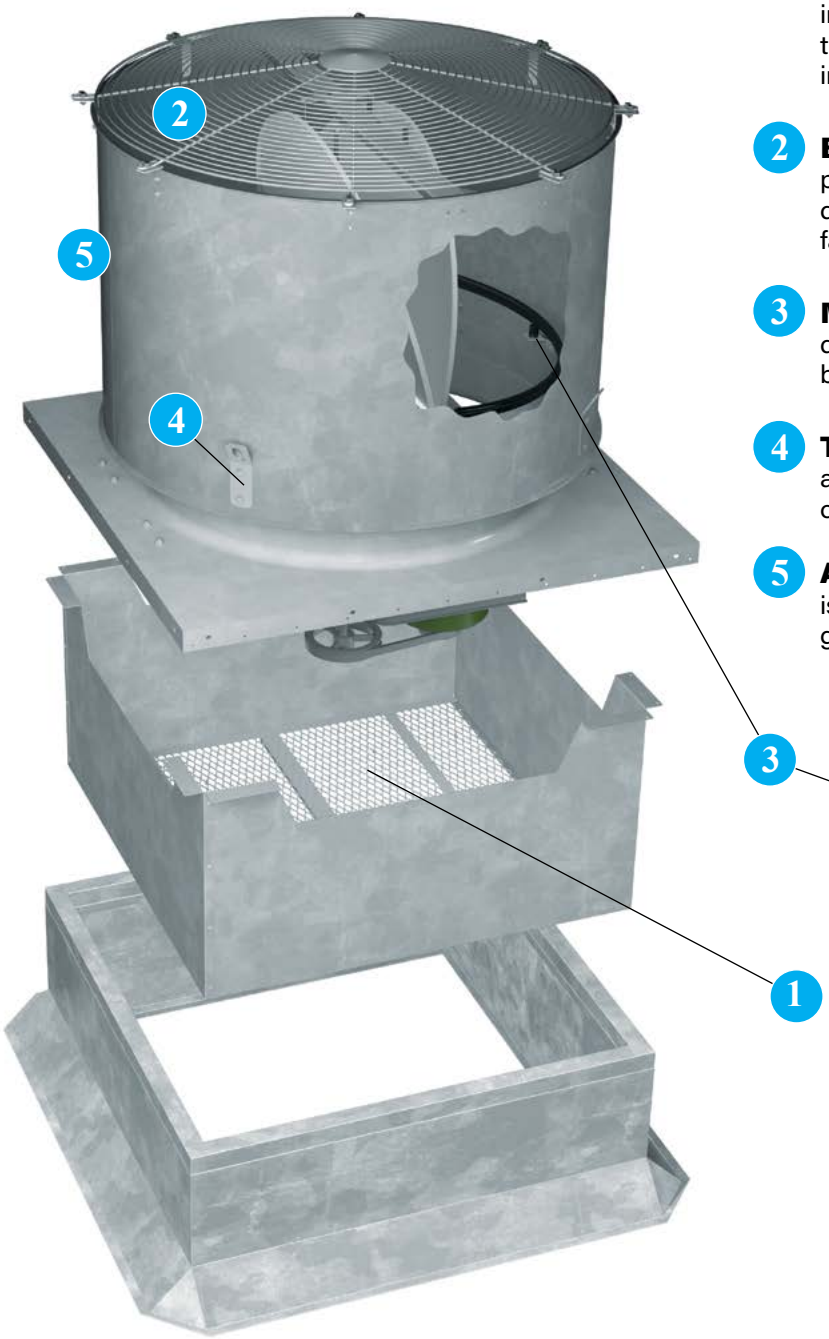

1. **Basket Type Inlet Safety Screen** A basket style guard shall be offered for models LUD and LUB to accommodate motors and drives extending down into the roof curb. Twin City Fan & Blower recommends the use of an inlet safety screen on all non-ducted installations.

2. **Bird Screen (Outlet)** A zinc plated steel bird screen protects the fan discharge from birds and other types of debris. An aluminum insect screen (LUBMO only) at the fan inlet prevents insects from entering the building.

3. **Magnetic Damper Latches** Used to hold butterfly dampers closed when fan is not in operation. Damper blades must be steel with magnetic damper latches.

4. **Tie Down Brackets** Quantity of four brackets to allow for unit to be anchored to the roof. Cables by others.

5. **Aluminum Construction** Stack cap assembly is constructed out of aluminum in lieu of standard galvanized. Orifice panel is not constructed of aluminum.

Magnetic
Damper Latch

TCF
TWIN CITY FAN

Canted Roof Curbs

- Constructed of 18-gauge galvanized steel with continuously-welded seams
- Large 3" built-in 45° cant to accommodate roofing material to top of curb. Cant is beveled at corners for better support of roofing material
- Wood nailer ($1^1/_2$") secured to top ledge
- Lined with $1^1/_2$" fiberglass fire-resistant, sound-absorbing insulation
- Damper shelf standard
- Options: Aluminum (16-gauge) construction, burglar security bars, metal liner (galvanized or aluminum), special heights up to 24", single- or double-pitched curbs for sloping roofs

Self-Flashing & Straight-Sided Roof Curbs

- Constructed of 18-gauge galvanized steel with continuously-welded seams
- Wide base plate (flashing) to insure watertight seal to roof
- Top ledge covered with $^3/_{16}$" polystyrene gasket (self-flashing) for weather seal and to reduce metal-to-metal conducted noise
- Wood nailer secured to top ledge (straight-sided)
- Lined with $1^1/_2$" fiberglass fire-resistant, sound-absorbing insulation
- Damper shelf standard
- Straight-sided roof curbs are constructed with the same features as the self-flashing curbs, but are one dimensional to allow for field supplied cants and roofing material to be brought up to the top of the curb
- Options: Aluminum (16-gauge) construction, burglar security bars, metal liner (galvanized or aluminum), special heights up to 24", single- or double-pitched curbs for sloping roofs

Self-Flashing Vented Roof Curbs

For High Temperature Applications

- Completely assembled unit, easier to install and less expensive than a field constructed curb
- Constructed of 18-gauge galvanized steel with continuously-welded seams and wide base flashing for watertight seal to roof
- Meets NFPA-96 code requirements
- Top ledge covered with $^3/_{16}$" polystyrene gasket
- Furnished with ventilation slots

Curb Adapters

- Constructed of heavy-gauge galvanized steel with continuously-welded seams
- Top ledge covered with $^3/_{16}$" polystyrene gasket to reduce metal-to-metal conducted noise and act as a weather seal
- Available in enlarger or reducer (shown) models

DISCONNECT SWITCHES

Disconnect switches provide positive electrical shutoff during fan cleaning or maintenance.

NEMA 3R Disconnect Switch

NEMA 3R Disconnect Switch

A NEMA 3R, rain proof, disconnect is available shipped loose for field mounting and wiring or factory mounted and wired externally.

NEMA 4 Disconnect Switch

A NEMA 4, water and dust tight, disconnect is available shipped loose for field mounting and wiring or factory mounted and wired externally.

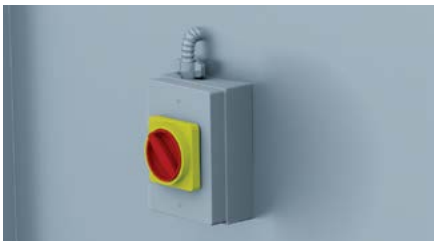

NEMA 4 Disconnect Switch

NEMA 7/9 Disconnect Switch

A NEMA 7/9 disconnect switch is recommended on fans with explosion proof motors. The NEMA 7/9 switch is designed for use with fans operating in hazardous environments. Available shipped loose for field mounting and wiring. (Not shown.)

TCF
TWIN CITY FAN

Material Specifications – Direct Drive, LUD

FAN SIZE	GAUGE OF MATERIAL						
	WIND BAND	FAN PANEL	DRIVE FRAME	IMPELLERS			HUBS
				E	B	Z	Z
14	20	16	14	DIE CAST ALUM.	CAST ALUM.	---	---
16	20	16	14			---	---
18	20	16	14			---	---
21	20	16	14			---	---
24	20	16	12			14	12
30	20	16	12			14	12
36	20	16	12			12	12
42	20	14	10			10	10
48	20	14	10			---	---

* All gauges are minimums.

Material Specifications – Belt Driven, LUB/LUBMO/LUBSH

FAN SIZE	GAUGE OF MATERIAL												SHAFT SIZE (IN.)		
	LUBMO/ LUBSH HOUSING	WIND BAND	FAN PANEL	DRIVE FRAME		IMPELLERS					HUBS				
				L1/L2	E/B/C/Z	L1/L2	E	B	C	Z	L1/L2	Z	L1	L2	E/B/C/Z
21	18	20	16	14	14	16	CAST ALUM.	CAST ALUM.	---	---	14	---	3/4	3/4	1
24	18	20	16	14	14	16			---	14	14	12	3/4	3/4	1
30	18	20	16	12	12	16			---	14	14	12	3/4	1	1
36	18	20	16	12	12	16			---	12	14	12	3/4	1	1
42	18	20	14	12	12	14			---	10	12	10	1	1 3/16	1 3/16
48	18	20	14	12	12	14			---	---	12	---	1	1 3/16	1 7/16
54	16	18	14	12	10	14	---		CAST ALUM.	---	12	---	1	1 3/16	1 7/16
60	16	18	14	12	10	12	---	---		---	3/16	---	1 3/16	1 1/2	1 11/16

* All gauges are minimums.

Shipping Weights

FAN SIZE	LUD	LUB			LUBMO			LUBSH		
		L1	L2	L3	L1	L2	L3	L1	L2	L3
14	85	---	---	---	---	---	---	---	---	---
16	96	---	---	---	---	---	---	---	---	---
18	108	---	---	---	---	---	---	---	---	---
21	133	138	144	148	273	281	283	273	281	283
24	161	160	162	175	302	307	320	302	307	320
30	213	210	232	242	395	417	477	395	417	477
36	290	256	281	321	469	493	542	469	493	542
42	370	324	399	438	630	676	778	630	676	778
48	416	372	454	519	711	760	875	711	760	875
54	---	443	522	594	831	911	1101	831	911	1101
60	---	549	633	724	988	1100	1214	988	1100	1214

* Weights are only approximate and do not include accessories. Consult Fan Selector software for actual shipping weights.

CFM Required to Open Damper Blades

DAMPER MATERIAL		14	16	18	21	24	30	36	42	48	54	60
STEEL	MIN.	1955	2516	3179	4284	5627	8704	12444	16949	22032	28305	34782
	MAX.	2413	3519	4805	6363	8259	16223	24544	29853	41165	52321	60827
ALUM	MIN.	1380	1776	2244	3024	3972	6144	8784	11964	15552	19980	24552
	MAX.	2413	3519	4805	6363	8259	16223	24544	29853	41165	52321	60827

The terminal velocity of rain is approximately 2000 feet per minute. Selections below this point are not recommended if rain entry into the building is a concern.

Model LUD

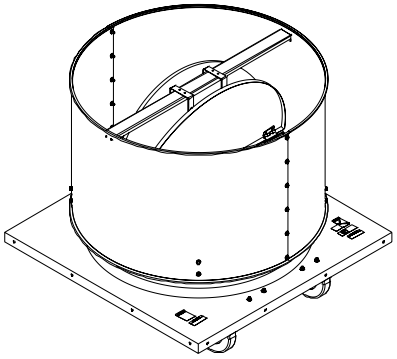

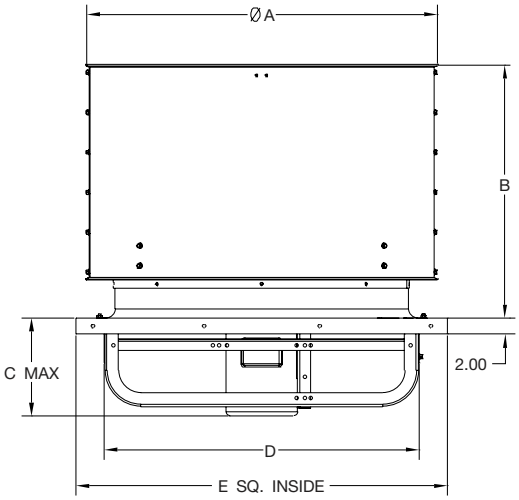

LUD Dimensions

SIZE	A	B	C MAX	D	E	CANTED CURB DIMENSIONS	SELF-FLASHING CURB DIMENSIONS
14	21.13	19.20	11.19	15.25	21.50	20 x 20	20.50 x 20.50
16	23.13	20.20	11.19	18.25	24.50	23 x 23	23.50 x 23.50
18	25.13	21.20	11.19	20.25	26.50	25 x 25	25.50 x 25.50
21	28.44	22.70	14.41	23.25	29.50	28 x 28	28.50 x 28.50
24	31.88	24.44	14.55	26.25	32.50	31 x 31	31.50 x 31.50
30	37.88	27.94	14.74	34.25	40.50	39 x 39	39.50 x 39.50
36	43.88	31.94	15.67	40.25	46.50	45 x 45	45.50 x 45.50
42	49.88	34.92	23.59	45.00	52.50	51 x 51	51.50 x 51.50
48	55.88	37.92	23.59	51.00	58.50	57 x 57	57.50 x 57.50

D-4870-4A

Model LUB

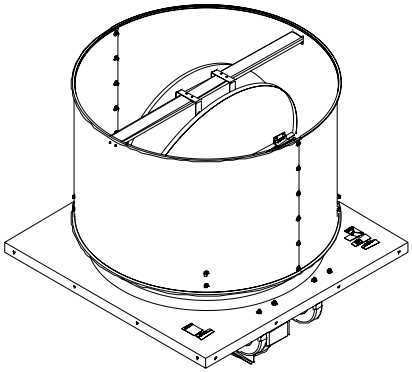

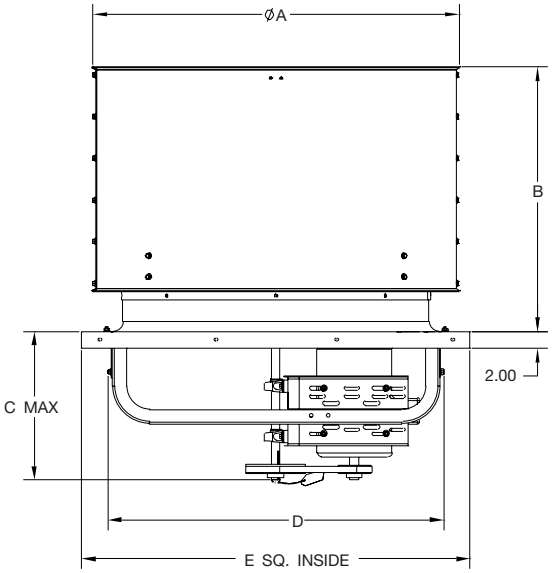

LUB Dimensions

SIZE	A	B	C MAX			D	E	CANTED CURB DIMENSIONS	SELF-FLASHING CURB DIMENSIONS
			L 1	L2	L3				
21	28.44	22.70	15.88	15.88	17.25	23.30	29.50	28 x 28	28.50 x 28.50
24	31.88	24.44	16.19	16.19	17.25	26.30	32.50	31 x 31	31.50 x 31.50
30	37.88	27.94	17.81	19.31	18.31	34.30	40.50	39 x 39	39.50 x 39.50
36	43.88	31.94	17.50	19.13	18.31	40.30	46.50	45 x 45	45.50 x 45.50
42	49.88	34.92	17.88	19.38	21.31	45.55	52.50	51 x 51	51.50 x 51.50
48	55.88	37.92	18.75	20.13	21.31	51.55	58.50	57 x 57	57.50 x 57.50
54	61.88	40.92	18.88	20.50	26.13	56.88	64.50	63 x 63	63.50 x 63.50
60	67.88	43.92	19.50	24.75	26.13	56.88	70.50	69 x 69	69.50 x 69.50

D-4870-1A

NOTE:
1. Dimensions are not to be used for construction.

Model LUBMO/LUBSH

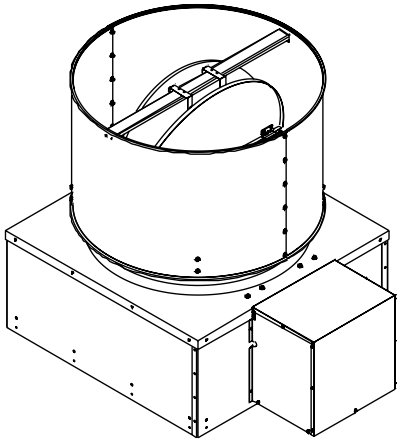

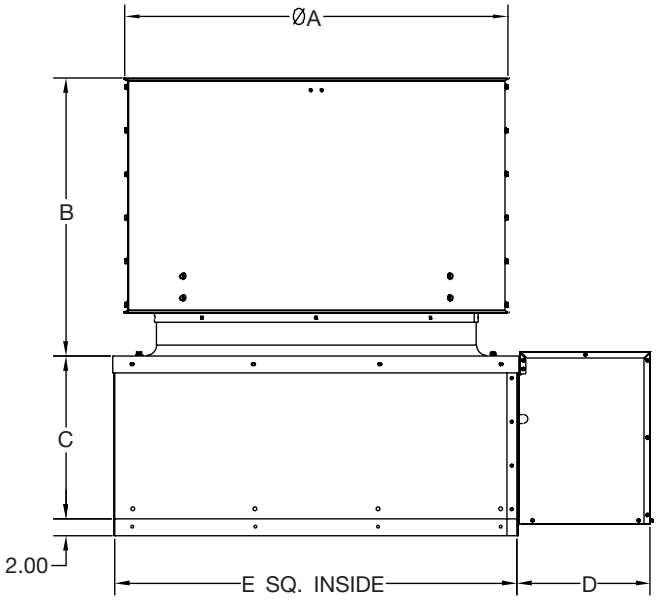

LUBMO/LUBSH Dimensions

SIZE	A	B	C	D	E	CANTED CURB DIMENSIONS	SELF-FLASHING CURB DIMENSIONS
21	28.44	22.70	17.50	13.25	29.25	28 x 28	28.50 x 28.50
24	31.88	24.44	17.50	13.25	32.25	31 x 31	31.50 x 31.50
30	37.88	27.94	18.50	15.25	40.25	39 x 39	39.50 x 39.50
36	43.88	31.94	18.50	15.25	46.25	45 x 45	45.50 x 45.50
42	49.88	34.92	21.50	17.50	52.25	51 x 51	51.50 x 51.50
48	55.88	37.92	21.50	17.50	58.25	57 x 57	57.50 x 57.50
54	61.88	40.92	22.75	19.00	64.25	63 x 63	63.50 x 63.50
60	67.88	43.92	22.75	19.00	70.25	69 x 69	69.50 x 69.50

D-4870-2
D-4870-3B

NOTES:
1. Dimensions are not to be used for construction.
2. Model LUBSH is only available with 12" or 18", vented, galvanized, self-flashing roof curbs.

TCF
TWIN CITY FAN

Model

LUB

Low Profile Upblast Roof Ventilators, shall be Model LUB (standard belt driven) as manufactured by Twin City Fan & Blower, Minneapolis, Minnesota.

PERFORMANCE — Fans shall be tested in accordance with AMCA test codes for air moving devices and shall be guaranteed by the manufacturer to deliver rated published performance levels. Model LUB shall be UL/cUL 705 listed for electrical.

CONSTRUCTION — Fan curb caps shall be constructed of heavy-gauge galvanized steel or painted steel for durability and appearance. Curb caps shall have a deep formed inlet venturi for efficient airflow and pre-punched holes for easy mounting to the roof curb. Stack cap with butterfly dampers shall contain a rain channel to protect against rain entry. Butterfly damper blades constructed of steel as standard, unless the outlet velocity of the fan is below the minimum required to open steel damper blades, then aluminum blades shall be provided. Stack caps and motor mount assemblies shall be constructed of heavy-gauge galvanized steel.

IMPELLERS — Impellers shall be constructed of fabricated steel or cast aluminum blades and hubs. Impellers shall be welded to the fan shaft or secured to the fan shaft with a taper lock bushing.

SHAFTS — Shafts shall be AISI 1045 cold rolled steel, accurately turned, ground, polished and ring-gauged for accuracy. Shafts shall be sized for the first critical speed of at least 1.43 times the maximum speed.

BEARINGS — Bearings are to be pillow block, heavy-duty, anti-friction, self-aligning, grease lubricated, ball type. Each fan's bearings are sized with a minimum average life, per AFBMA, in excess of 200,000 hours when operating at the maximum RPM of the fan size.

DRIVES — Motor sheaves shall be cast iron and supplied as variable pitch standard. Drives and belts shall be rated for a minimum of 150% of the required motor HP.

MOTORS — All motors shall be single-phase or three-phase induction, permanently lubricated, heavy-duty, ball bearing type, closely matched to the fan load and provided at the voltage, phase, hertz and enclosure as provided on the fan schedule.

FINISH AND COATING — Fans shall have galvanized steel or finish painted curb caps, motor supports and windbands. The entire fan assembly, excluding the shaft, shall be properly washed and pretreated before application of a rust-preventative primer, if called out on the order. After the fan is completely assembled, a finish coat of paint shall be applied to the entire assembly, if called out on the order. The fan shaft shall be coated with a petroleum-based rust protectant.

ACCESSORIES — When specified, accessories such as inlet safety guards, fusible link assemblies, magnetic damper latches, hinged bases, extended lube lines, roof curbs and disconnect switches shall be provided by Twin City Fan & Blower to maintain one source responsibility.

FACTORY RUN TEST — All fans prior to shipment shall be completely assembled and test run as a unit at operating speed or maximum RPM allowed for the particular construction type. Each impeller shall be statically and dynamically balanced in accordance with ANSI/AMCA 204-96 "Balance Quality and Vibration Levels for Fans" to Fan Application Category BV-3, Balance Quality Grade G6.3. Balance readings shall be taken by electronic type equipment in the axial, vertical and horizontal directions. Records shall be maintained and a written copy shall be available upon request.

Model

LUD

Low Profile Upblast Roof Ventilators, shall be Model LUD (standard direct drive) as manufactured by Twin City Fan & Blower, Minneapolis, Minnesota.

PERFORMANCE — Fans shall be tested in accordance with AMCA test codes for air moving devices and shall be guaranteed by the manufacturer to deliver rated published performance levels. Model LUD shall be UL/cUL 705 listed for electrical.

CONSTRUCTION — Fan curb caps shall be constructed of heavy-gauge galvanized steel or painted steel for durability and appearance. Curb caps shall have a deep formed inlet venturi for efficient airflow and pre-punched holes for easy mounting to the roof curb. Stack cap with butterfly dampers shall contain a rain channel to protect against rain entry. Butterfly damper blades constructed of steel as standard, unless the outlet velocity of the fan is below the minimum required to open steel damper blades, then aluminum blades shall be provided. Stack caps and motor mount assemblies shall be constructed of heavy-gauge galvanized steel.

IMPELLERS — Impellers shall be constructed of fabricated steel or cast aluminum blades and hubs. Impellers shall be secured to the motor shaft with a taper lock bushing.

MOTORS — All motors shall be single-phase or three-phase induction, permanently lubricated, heavy-duty, ball bearing type, closely matched to the fan load and provided at the voltage, phase, hertz and enclosure as provided on the fan schedule.

FINISH AND COATING — Fans shall have galvanized steel or finish painted curb caps, motor supports and windbands. The entire fan assembly, excluding the shaft, shall be properly washed and pretreated before application of a rust-preventative primer, if called out on the order. After the fan is completely assembled, a finish coat of paint shall be applied to the entire assembly, if called out on the order. The fan shaft shall be coated with a petroleum-based rust protectant.

ACCESSORIES — When specified, accessories such as inlet safety guards, fusible link assemblies, magnetic damper latches, hinged bases, extended lube lines, roof curbs and disconnect switches shall be provided by Twin City Fan & Blower to maintain one source responsibility.

FACTORY RUN TEST — All fans prior to shipment shall be completely assembled and test run as a unit at operating speed or maximum RPM allowed for the particular construction type. Each impeller shall be statically and dynamically balanced in accordance with ANSI/AMCA 204-96 "Balance Quality and Vibration Levels for Fans" to Fan Application Category BV-3, Balance Quality Grade G6.3. Balance readings shall be taken by electronic type equipment in the axial, vertical and horizontal directions. Records shall be maintained and a written copy shall be available upon request.

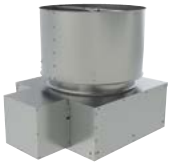

Model

LUBMO

Low Profile Upblast Roof Ventilators, shall be Model LUBMO (belt driven with motor out of the airstream) as manufactured by Twin City Fan & Blower, Minneapolis, Minnesota.

PERFORMANCE — Fans shall be tested in accordance with AMCA test codes for air moving devices and shall be guaranteed by the manufacturer to deliver rated published performance levels. Model LUBMO shall be UL/cUL 705 listed for electrical.

CONSTRUCTION — Fan curb caps shall be constructed of heavy-gauge galvanized steel or painted steel for durability and appearance. Curb caps shall have a deep formed inlet venturi for efficient airflow and pre-punched holes for easy mounting to the roof curb. Stack cap with butterfly dampers shall contain a rain channel to protect against rain entry. Butterfly damper blades constructed of steel as standard, unless the outlet velocity of the fan is below the minimum required to open steel damper blades, then aluminum blades shall be provided. Stack caps and motor mount assemblies shall be constructed of heavy-gauge galvanized steel.

IMPELLERS — Impellers shall be constructed of fabricated steel or cast aluminum blades and hubs. Impellers shall be welded to the fan shaft or secured to the fan shaft with a taper lock bushing.

SHAFTS — Shafts shall be AISI 1045 cold rolled steel, accurately turned, ground, polished and ring-gauged for accuracy. Shafts shall be sized for the first critical speed of at least 1.43 times the maximum speed.

BEARINGS — Bearings are to be pillow block, heavy-duty, anti-friction, self-aligning, grease lubricated, ball type. Each fan's bearings are sized with a minimum average life, per AFBMA, in excess of 200,000 hours when operating at the maximum RPM of the fan size.

DRIVES — Motor sheaves shall be cast iron and supplied as variable pitch standard. Drives and belts shall be rated for a minimum of 150% of the required motor HP.

MOTORS — All motors shall be single-phase or three-phase induction, permanently lubricated, heavy-duty, ball bearing type, closely matched to the fan load and provided at the voltage, phase, hertz and enclosure as provided on the fan schedule.

FINISH AND COATING — Fans shall have galvanized steel or finish painted curb caps, motor supports and windbands. The entire fan assembly, excluding the shaft, shall be properly washed and pretreated before application of a rust-preventative primer, if called out on the order. After the fan is completely assembled, a finish coat of paint shall be applied to the entire assembly, if called out on the order. The fan shaft shall be coated with a petroleum-based rust protectant.

ACCESSORIES — When specified, accessories such as inlet safety guards, fusible link assemblies, magnetic damper latches, hinged bases, extended lube lines, roof curbs and disconnect switches shall be provided by Twin City Fan & Blower to maintain one source responsibility.

FACTORY RUN TEST — All fans prior to shipment shall be completely assembled and test run as a unit at operating speed or maximum RPM allowed for the particular construction type. Each impeller shall be statically and dynamically balanced in accordance with ANSI/AMCA 204-96 "Balance Quality and Vibration Levels for Fans" to Fan Application Category BV-3, Balance Quality Grade G6.3. Balance readings shall be taken by electronic type equipment in the axial, vertical and horizontal directions. Records shall be maintained and a written copy shall be available upon request.

Model

LUBSH

Low Profile Upblast Roof Ventilators, shall be Model LUBSH (smoke and heat) as manufactured by Twin City Fan & Blower, Minneapolis, Minnesota.

PERFORMANCE — Fans shall be tested in accordance with AMCA test codes for air moving devices and shall be guaranteed by the manufacturer to deliver rated published performance levels. Model LUBSH shall be UL/cUL listed for Smoke Control Systems (500°F for 4 hours and 1000°F for 1 hour).

CONSTRUCTION — Fan curb caps shall be constructed of heavy-gauge galvanized steel or painted steel for durability and appearance. Curb caps shall have a deep formed inlet venturi for efficient airflow and pre-punched holes for easy mounting to the roof curb. Stack cap with butterfly dampers shall contain a rain channel to protect against rain entry. Butterfly damper blades constructed of steel as standard, unless the outlet velocity of the fan is below the minimum required to open steel damper blades, then aluminum blades shall be provided. Stack caps and motor mount assemblies shall be constructed of heavy-gauge galvanized steel.

IMPELLERS — Impellers shall be constructed of fabricated steel or cast aluminum blades and hubs. Impellers units shall be welded to the fan shaft or secured to the fan shaft with a taper lock bushing.

SHAFTS — Shafts shall be AISI 1045 cold rolled steel, accurately turned, ground, polished and ring-gauged for accuracy. Shafts shall be sized for the first critical speed of at least 1.43 times the maximum speed.

BEARINGS — Bearings are to be pillow block, heavy-duty, anti-friction, self-aligning, grease lubricated, ball type. Each fan's bearings are sized with a minimum average life, per AFBMA, in excess of 200,000 hours when operating at the maximum RPM of the fan size.

DRIVES — Motor sheaves shall be cast iron and supplied as variable pitch standard. Drives on model LUBSH shall be rated for a minimum of 200% of the required motor HP and shall be two-groove minimum.

MOTORS — All motors shall be single-phase or three-phase induction, permanently lubricated, heavy-duty, ball bearing type, closely matched to the fan load and provided at the voltage, phase, hertz and enclosure as provided on the fan schedule.

FINISH AND COATING — Fans shall have galvanized steel or finish painted curb caps, motor supports and windbands. The entire fan assembly, excluding the shaft, shall be properly washed and pretreated before application of a rust-preventative primer, if called out on the order. After the fan is completely assembled, a finish coat of paint shall be applied to the entire assembly, if called out on the order. The fan shaft shall be coated with a petroleum-based rust protectant.

ACCESSORIES — When specified, accessories such as inlet safety guards, fusible link assemblies, magnetic damper latches, hinged bases, extended lube lines, roof curbs and disconnect switches shall be provided by Twin City Fan to maintain one source responsibility.

FACTORY RUN TEST — All fans prior to shipment shall be completely assembled and test run as a unit at operating speed or maximum RPM allowed for the particular construction type. Each impeller shall be statically and dynamically balanced in accordance with ANSI/AMCA 204-96 "Balance Quality and Vibration Levels for Fans" to Fan Application Category BV-3, Balance Quality Grade G6.3. Balance readings shall be taken by electronic type equipment in the axial, vertical and horizontal directions. Records shall be maintained and a written copy shall be available upon request.

INDUSTRIAL PROCESS AND COMMERCIAL VENTILATION SYSTEMS

CENTRIFUGAL FANS | UTILITY SETS | PLENUM & PLUG FANS | INLINE CENTRIFUGAL FANS
MIXED FLOW FANS | TUBEAXIAL & VANEAXIAL FANS | WALL MOUNTED FANS | ROOF VENTILATORS
CENTRIFUGAL ROOF & WALL EXHAUSTERS | CEILING VENTILATORS | GRAVITY VENTILATORS | DUCT BLOWERS
RADIAL BLADED FANS | RADIAL TIP FANS | HIGH EFFICIENCY INDUSTRIAL FANS | PRESSURE BLOWERS
LABORATORY EXHAUST FANS | FILTERED SUPPLY FANS | MANCOOLERS | FIBERGLASS FANS | CUSTOM FANS

TCF
TWIN CITY FAN

TWIN CITY FAN & BLOWER
WWW.TCF.COM

5959 TRENTON LANE N. | MINNEAPOLIS, MN 55442 | PHONE: 763-551-7600 | FAX: 763-551-7601

©2005-2024 Twin City Fan Companies, Ltd., Minneapolis, MN. All rights reserved. Catalog illustrations cover the general appearance of Twin City Fan & Blower products at the time of publication and we reserve the right to make changes in design and construction at any time without notice.