MPLFN, MPLFS, MPLQN, MPLQS Modular Plenum Fans

INSTALLATION, OPERATION & MAINTENANCE MANUAL

IM-495

May 2014

Throughout this manual, there are a number of HAZARD WARNINGS that must be read and adhered to in order to prevent possible personal injury and/or damage to equipment. Two signal words "WARNING" and "CAUTION" are used to indicate the severity of a hazard and are preceded by the safety alert symbol.

WARNING
Used when serious injury or death MAY result from misuse or failure to follow specific instructions.

CAUTION
Used when minor or moderate injury or product / equipment damage MAY result from misuse or failure to follow specific instructions.

NOTICE
Indicates information considered important, but not hazard-related.

It is the responsibility of all personnel involved in installation, operation and maintenance to fully understand the Warning and Caution procedures by which hazards are to be avoided.

Contents

Introduction 1
Shipping and Receiving 1
Handling 2
Short Term Storage 2
Long Term Storage 2
Foundations and Supporting Structures 2
Fan Installation 3
Assembly of Fans 3
Electrical Wiring of Fans 4
Fan Operation – Safety 4
Operation Checklist 4
Maintenance of Fans 5
General Motor Maintenance 5
Wheel and Shaft Maintenance 5
Structural Maintenance 5
Troubleshooting Guidelines 5
Troubleshooting Performance Problems
Air Capacity Problems 5
Noise Problems 5
Vibration Problems 5
Motor Problems 6
Limitation of Warranties and Claims 6

Introduction

The purpose of this manual is to provide instructions that complement good general practices when installing or operating fans manufactured by Twin City Fan & Blower. It is the responsibility of the purchaser to provide qualified personnel experienced in the installation, operation, and maintenance of air moving equipment.

Instructions given in the body of this manual are general in nature and apply to a variety of models manufactured by Twin City Fan & Blower. Most units can be installed and maintained with the instructions given. Additional product and engineering information is available at www.tcf.com.

Special applications may require additional information. These instructions are supplied in the form of attached appendices. Use the instructions in the appendix if the directions in this manual differ from instructions in the appendix.

As always, follow good safety practices when installing, maintaining and operating your air moving equipment. A variety of safety devices are available. It is the user's responsibility to determine adequate safety measures and to obtain the required safety equipment.

Shipping and Receiving

All Twin City Fan & Blower products are carefully constructed and inspected before shipment to insure the highest standards of quality and performance.

Compare all components with the bill of lading or packing list to verify that the proper unit was received.

Check each unit for any damage that may have occurred in transit. Any damage should be reported immediately to the carrier and the necessary damage report filed.

Figure 1. Lifting Lug Locations

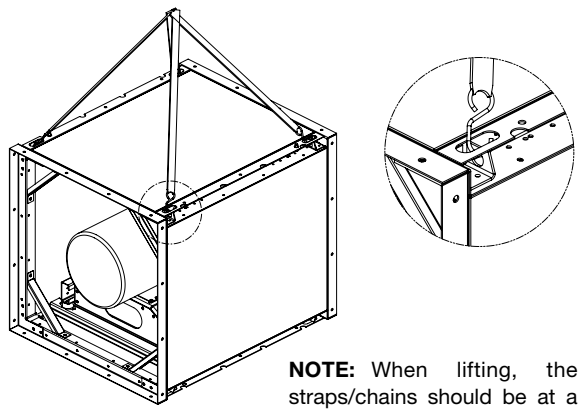

NOTE: When lifting, the straps/chains should be at a minimum angle of 45°

©2014 – 2016 Twin City Fan Companies, Ltd.

Handling

Handling of all air moving equipment should be conducted by trained personnel and be consistent with safe handling practices. Verify the lift capacity and operating condition of handling equipment.

CAUTION

Maintain handling equipment to avoid serious personal injury.

Units shipped completely assembled may be lifted with slings and spreader bars. Use well-padded chains, cables or nylon straps. On most units, lifting lugs are provided for attaching chains (see Figure 1 on page 1). Lift the fan in a fashion that protects the fan and fan coating from damage. Never lift a fan by the inlet or discharge flange, shafting or drives, wheel or impeller, motor or motor base, or in any other manner that may bend or distort parts.

Partial or disassembled units require special handling. All parts should be handled in a fashion which protects the coatings and parts from damage. Components should be handled such that forces are not concentrated and bending or distortion cannot occur.
Housing should be lifted using straps and spreaders. Do not distort housing or side plates when lifting.

Short Term Storage

If fan installation is to be delayed, store the unit in a protected area. Protect the fan and motor bearings from moisture and vibration (or shock loading).

Long Term Storage

Prior to Storage – Motor bearings are to be greased at the time of going into extended storage per the motor manufacturer's specifications.
Storage Procedure – Fans should be stored indoors whenever possible where control over temperature, shock and dust is reasonably maintained. If units are to be stored outside in the elements, they should be covered with a water-resistant material. Stored equipment should be stored on a clean, dry floor or blocked up off the ground on blocks to prevent unit from setting in any water or directly on the ground. If shock or vibration will be present during storage, the unit may need to be placed on some type of vibration dampening material to aid in preventing brinelling of the bearing surfaces.

Periodic Check – On a monthly interval, the equipment should be checked to ensure that it has remained in an acceptable stored condition. After verifying the fan is disconnected from the electrical supply, the fan wheel should be rotated several times by hand while adding enough grease to replenish the bearing surfaces with fresh grease and to maintain a full bearing cavity. Grease used must be compatible with that already supplied in the motor and fan bearings. The fan impeller should be left at approximately 180 degrees from that of the previous month to prevent the shaft and impeller from taking a set in one position. Storage records should be maintained which indicate the above requirements have been followed. Consult the motor manufacturer for proper storage, space heater connection and lubrication if the unit was supplied with one.

Start-Up – When the unit is removed from storage, all bearing grease should be purged and replenished with fresh grease as per the lubrication decal. The motor resistance should be measured to verify it is still at a satisfactory level compared to the value recorded prior to storage.

Foundations and Supporting Structures

Floor mounted fans should be installed on a flat, level surface with sufficient structure support. Support shall be suitable for static and dynamic loads and foundation frequencies be separated at least 20% from the rotational speed/speed ranges.

If the fans are mounted in a structure, the support should be placed under the enclosure inlet and outlet edges as a minimum. The fan mounting surfaces or beams must be flat and level. Structural resonance should be at least 20% from the fan operating speed, when considering the weight of all fans and accessories.

Any ducting and/or dampers with sleeves should have independent support; do not use the fan for support. Isolating the fan from ductwork with flex connections eliminates transmission of vibration.

1. Sufficient structure must be provided to support weight of fan assembly.
2. Sufficient restraint must be provided to resist the pressure force against the fans. Typically fans are assembled in an application in a modular fashion with multiple fans working in parallel. The cumulative thrust force must be restrained to prevent the fan assemblies from leaning or tipping forward. The force acting on the fan assemblies is calculated as shown below.

$$\text{Thrust force } (lb_f) = \frac{H \times W \times N \times P_s}{27.68}$$

Where

P_s = Maximum operating static pressure (in. w.g.)
W = Width of each individual fan (in.)
H = Height of each individual fan (in.)
N = Quantity of fans in system
27.68 = conversion factor for in. w.g. to PSI

Example

Parallel fan system employing nine (9) – Size 182 fans in a 3 x 3 configuration. (3 fans high x 3 fans wide)
System pressure is 5 inches of water column.
Outside dimension of fan housing = approx. 38 in. by 38 in.

$$\text{Thrust force } (lb_f) = \frac{H \times W \times N \times P_s}{27.68}$$

$$\text{Thrust force } (lb_f) = \frac{38 \times 38 \times 9 \times 5}{27.68} = 2348 \ (lb_f)$$

NOTICE

The thrust force is distributed evenly across the front surface of the parallel fan system

Figure 2.

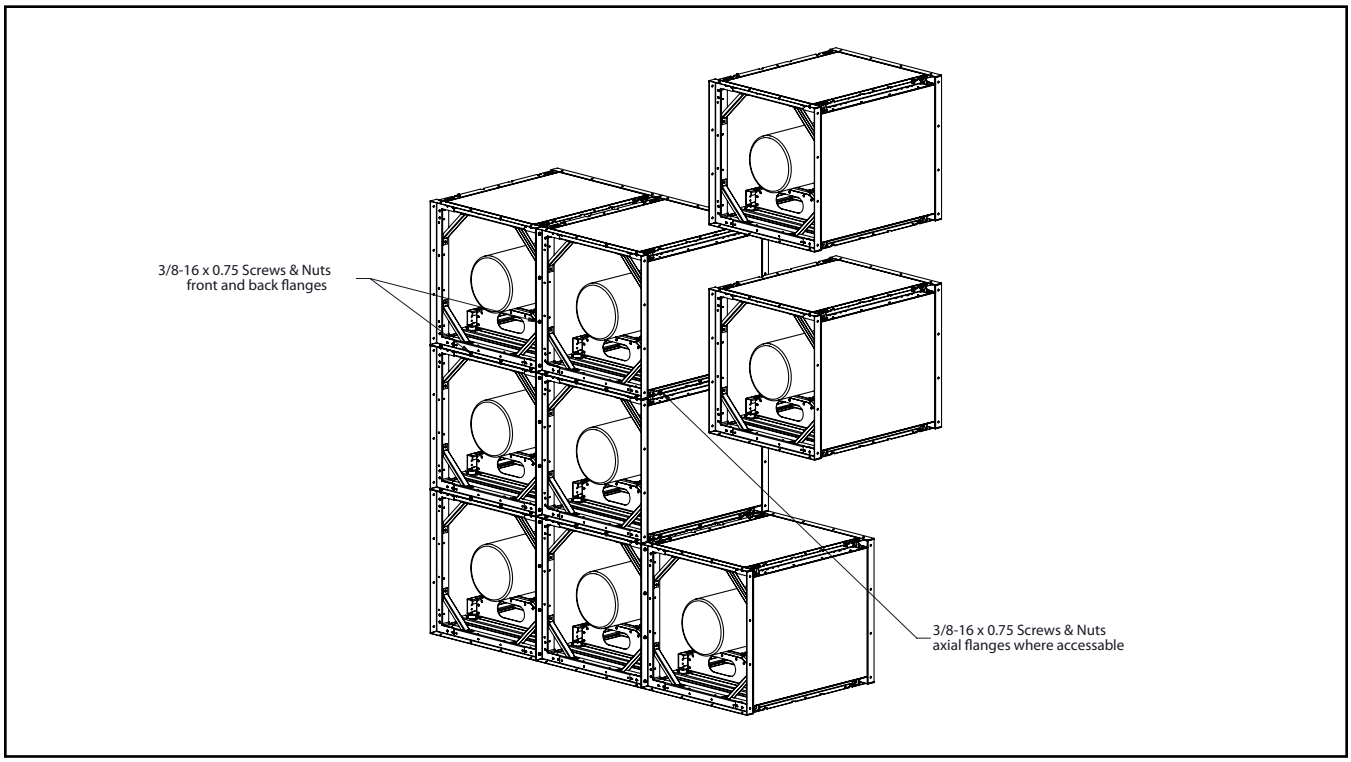

3. Recommend attachments to the sides and top of the parallel fan system incorporating some form of spring support, i.e. rubber snubbers/isolators or springs. Such devices should be attached to prevent significant point loading on an individual fan. They should be located on the side of the parallel fan system at the top corner and along the top every 2 fans or less.
   a. When the fans are rigidly mounted to the base, an assumption can be made that half of the thrust load will be supported at the base, and the supports added at the top of the fan need to carry a minimum of one half of the thrust load.
   b. When the fans are supported on an isolation base or isolators, it will be necessary to add thrust restraints around the periphery of the fan assembly to support the entire thrust load. Flex connections are required when using isolators or isolation base.
   c. Attachments to the fan can be made utilizing the factory mounting holes. Recommend that the gage of the materials be checked for tear out strength in thrust applications. If necessary utilize multiple mounting hole locations to distribute the load.

Table 1. Torque Values MPLFN/MPLFS/MPLQN/MPLQS Fasteners

Size	Net Type	Torque Values (ft lbs)
3/8 – 16 UNC	Nylock	16 – 17

Fan Installation – Factory Assembled Units

Follow proper handling instructions given earlier.

1. Move the fan to the final mounting position.
2. Remove skid, crates, and packing materials carefully.
3. If supplied, place vibration pads or isolation base on mounting bolts. Line up holes in fan base with bolts.
4. Place fan on mounting structure. Carefully level unit using shims as required at all mounting hole locations. Bolt down the unit.

Assembly of Fans

1. Fans must be securely bolted to a base either directly through the factory mounting holes or with a properly designed clip. Final bolting of each individual row of fans to the support structure or base should be done after the individual fans are bolted together as a row.

NOTICE

A thin gasket or caulk may be used to prevent undesired air leakage and noise.

2. The bolts to be snugged up on vertical sections for the first row. Once all fasteners are in place, the bolts shall be tightened to torque values in table. See Table 1.
3. The bolts holding the fan to the supporting structure can now be torqued.
4. The second row and succeeding rows can be installed using the same assembly steps as the first row.
5. Sealing around the perimeter should be accomplished using a flexible material.

Electrical Wiring of Fans

The customer is required to investigate and install equipment in compliance with all local electrical and safety codes for the equipment location. Twin City Fan & Blower requires all power cabling be located away from the rotating impeller and fastened to the inside of the fan housing. Wiring must be routed away from the motor to reduce potential contact with hot or greasy surfaces.

When a fan is supplied with an outlet damper, wiring the electrical supply to the motor requires routing the supply through the damper housing frame. Knockouts of various sizes are provided in the damper housing frame to accommodate cable connectors or raceway.

Fan Operation - Safety

For general safety practices for air moving equipment, see AMCA Catalog 410.

Twin City Fan & Blower has many safety accessories available. These safety devices include (but are not limited to) inlet and discharge screens. The use, abuse, or non-use of safety devices is the responsibility of the purchaser.

Facility-related safety conditions include fan accessibility and location. How easily can non-service personnel access the unit? Is the fan in a hazardous duty environment? Was the unit ordered for this duty? Other concerns must also be addressed. All fans should be powered through switches which are easily accessible to service personnel from the fan. Every switch should have the ability to be "locked-off" by the service person and the key to be retained by this person to prevent accidental power of the fan while service is in process.

Figure 4. Wheel-Funnel Overlap

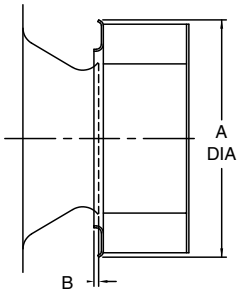

MPLFN/MPLFS/MPLQN/MPLQS

Size	A	B	Size	A	B
122	12.75	0.130	**245/245C**	25.51	0.50
150	15.62	0.172	**270/270C**	28.11	0.55
165	17.18	0.203	**300/300C**	31.23	0.61
182/182C	19.00	0.38	**330/330C**	34.36	0.67
200/200C	20.82	0.41	**365/365C**	38.00	0.75
222/222C	23.16	0.45			

Operation Check List

WARNING

Verify that proper safety precautions have been followed. Electrical power must be locked off.

Check fan mechanism components:

- □ System connections are properly made and tightened. □
- □ Bearings are properly lubricated.
- □ Wheel, drives and fan surfaces are clean and free of debris.
- □ Rotate the impeller by hand to verify it has not shifted in transit.
- □ Check fan/wheel overlap. (See Figure 4.)

Check fan electrical components:

- □ Motor is wired for proper supply voltage.
- □ Motor was properly sized for power and rotational inertia of rotating assembly.
- □ Motor is properly grounded.
- □ All leads are properly insulated.

Trial "bump":

- □ Turn on power just long enough to start assembly rotating.
- □ Check rotation for agreement with rotation arrow. Does the assembly make any unusual noise? (See Figure 5.)
- □ Correct any problems which may have been found. (Follow safety guidelines - shut power off.) Perform checklist again until unit is operating properly.
- □ Run unit up to speed.

Figure 5. Proper Wheel Rotation

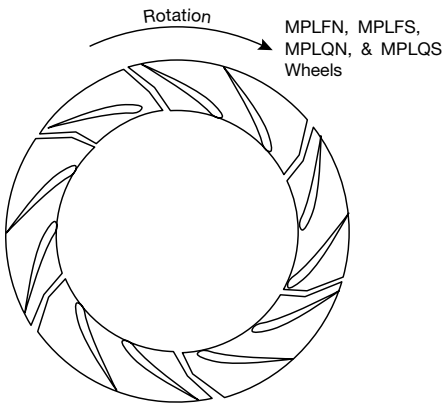

Verify fastener tightness. These may have loosened during shipment or installation.

- □ Setscrews attaching wheel hub to shaft.
- □ Nuts on inlet funnel.
- □ Nuts and bolts holding motor.
- □ Nuts holding housing frame to base and base to ground.
- □ Bolts in taper-lock bushings.
- □ Grease line connections.

After one week of operation, check all nuts, bolts and setscrews and tighten if necessary.

Maintenance of Fans

This section contains general maintenance instructions for your Twin City Fan & Blower unit. For specific information about maintenance of components, particularly for special application fans, see the attached documents.

General Motor Maintenance

The three basic rules of motor maintenance are keep the motor clean, dry and properly lubricated.

Keeping motors and windings clean is important because dirt and dust serve as thermal insulators. Heat normally dissipated by the motor is trapped causing overheating and/or premature failure. Blow dust and dirt out of windings and off the motor periodically. Use low pressure (50 psig) airstream so that winding damage does not occur. Keep the area surrounding the motor open so the air can circulate through the motor cooling fan. Follow normal maintenance schedule given to the right.

Motors should be kept dry to avoid electrical short circuits. Motors kept in storage for long periods of time can have moisture condense on the windings. Be certain the motor is dry before using.

Some smaller motors are lubricated for life. Motor bearing lubrication, if required, must follow a rigorous schedule. Motors less than 10 hp running about eight hours a day in a clean environment should be lubricated once every five years; motors 15 to 50 hp, every 3 years; and motors 50 to 150 hp, yearly. For motors in a dusty or dirty environment or running 24 hours a day, divide the service interval by 2. If the environment is very dirty or high temperatures exist, divide the service interval by 4. Lubrication requirements are normally attached to the motor. Do not overlubricate.

Wheel and Shaft Maintenance

Periodically inspect the shaft and wheel for dirt buildup, corrosion, and signs of excess stress or fatigue. Clean the components and, when appropriate, apply new coatings. (Any addition of coatings or weld can create an imbalance.) Check the balance of the assembly.

Structural Maintenance

All structural components or devices used to support or attach the fan to a structure should be checked at regular intervals. Vibration isolators, bolts, foundations, etc., are subject to failure from corrosion, erosion, and other causes. Improper mounting can lead to poor operation characteristics or fan fatigue and failure.

Check metallic components for corrosion, cracks, or other signs of stress. Concrete should be checked to ensure the structural integrity of the foundation.

Troubleshooting Guidelines

Use current safety practices when investigating fan or system performance problems. General safe practices and performance troubleshooting guidelines can be found in AMCA Publications 410 and 202, respectively. Fan application and field measurement procedures can be found in AMCA Publications 201 and 203.

Troubleshooting Performance Problems

The lists below indicate possible areas to check when air or sound values do not match expectations. Most fan problems can be pinpointed to one of these common causes.

Air Capacity Problems:

1. Resistance of system not at design rating. If resistance is lower than expected, both airflow and horsepower may be up. If resistance is higher than anticipated, air volume will be down.
2. Fan speed is not at design speed.
3. Air density not at design values. Also check air performance measurement techniques/procedures.
4. Devices for air modulation are closed or plugged. Also check filters.
5. Wheel mounted improperly or is rotating in reverse.
6. Parts of system or fan have been damaged or need cleaning.

Noise Problems:

1. Air performance is incorrect and fan is not at design point of operation. Fan forced to operate in an unstable flow region.
2. Bearing failure. Check bearings (lubrication).
3. Supply voltage high or inconsistent supply frequency. Adjustable frequency controllers can generate motor noise.
4. Objects which are installed in a high velocity airstream can generate noise. This includes flow sensors, turning vanes, etc.
5. Poor fan inlet conditions.
6. Acoustics or sound measurement procedure incorrect.

Vibration Problems:

1. Misalignment of drive components.
2. Poor foundations or mounting structure (resonances).
3. Foreign material attached to rotating components.
4. Damaged rotating components (bearings, shaft, fan, wheel).
5. Broken, loose or missing setscrews.
6. Loose bolts.
7. Vibration transmitted by another source.
8. Water accumulating in airfoil blades.
9. Fan is operating in stall or unstable flow region.

NOTICE

All fans manufactured by Twin City Fan & Blower are factory balanced prior to shipment. Installation variables, handling, and movement of the fan during shipment may cause the rotating assembly to shift. Balance should be checked once the fan is installed. If a final trim balance is required, it is the end user's responsibility to bring the fan back to factory specifications. Final trim balancing is not the responsibility of Twin City Fan & Blower.

Motor Problems:

1. Incorrect wiring.
2. Speed of fan too high.
3. Parts improperly installed - binding.
4. Bearings improperly lubricated.
5. WR^2 capability of motor too low for application.
6. Protection devices may be improperly sized.

Motor Lubrication – The major cause of motor bearing failure is contamination of grease, insufficient grease, or incompatibility of grease. If a fan is to be stored for any length of time at the job site and the bearings are regreasable, the motor bearings should immediately be filled with grease while rotating the fan and then the bearings should be regreased and rotated monthly. This will prevent moisture, which condenses within the bearing, from corroding the raceways. Most greases used on motor bearings are lithium base. Use the greases shown in the motor information. Do not mix the bases without completely purging out the initial grease.

Initially, follow the lubrication instruction in the motor information. The frequency of lubrication should be adjusted depending on the condition of the old grease being purged. This is the responsibility of the user. If the grease is dirty, the lubrication frequency should be more often.

a. Noise – If a bearing is increasing in noise intensity and/or vibration, it will probably result in failure.

b. Temperature – If a bearing temperature begins to gradually rise, it will generally result in failure. A bearing can operate up to 200 degrees and operate satisfactorily if the temperature remains constant and the bearing receives adequate lubrication. Remember that a roller bearing under the same load and speed will be somewhat more noisy and run warmer than a ball bearing. This is normal.

Rough handling and/or dropping a fan can result in brinelling the bearing. This appears as a clicking noise at first, then gradually worsens until failure.

Limitation of Warranties and Claims

Seller warrants to the original purchaser that the goods sold hereunder shall be free from defects in workmanship and material under normal use and service (except in those cases where the materials are supplied by the buyer) for a period of one year from the date of original installation or eighteen (18) months from the date of shipment, whichever occurs first. The liability of seller under this warranty is limited to replacing, repairing, or issuing credit (at cost, F.O.B. factory and at seller's discretion) for any part or parts which are returned by buyer during such period provided that:

a. seller is notified in writing within ten (10) days following discovery of such defects by buyer, or within ten (10) days after such defects should reasonably have been discovered, whichever is less;

b. the defective unit is returned to seller, transportation charges prepaid by buyer.

c. payment in full has been received by seller or said products; and

d. seller's examination of such unit shall disclose to its satisfaction that such defects have not been caused by misuse, neglect, improper installation, repair, alteration, act of God, or accident.

e. seller cannot guarantee sound pressure levels or dBA.

No warranty made hereunder shall extend to any seller product whose serial number is altered, effaced or removed. Seller makes no warranty, express or implied, with respect to motors, switches, controls, or other components of seller's product, where such components are warranted separately by their respective manufacturers. THIS WARRANTY IS EXPRESSLY IN LIEU OF ALL OTHER WARRANTIES, EXPRESS OR IMPLIED, WHETHER STATUTORY OR OTHERWISE, INCLUDING ANY IMPLIED WARRANTY OF MERCHANTABILITY OR FITNESS FOR A PARTICULAR PURPOSE. In no event shall seller be liable to buyer for indirect, incidental collateral, or consequential damages of any kind. (BUYER'S FAILURE TO PAY THE FULL AMOUNT DUE WITHIN SIXTY (60) DAYS OF DATE OF INVOICE SHALL OPERATE TO RELEASE SELLER FROM ANY AND ALL LIABILITY OR OBLIGATION ARISING PURSUANT TO ANY WARRANTY, EXPRESS OR IMPLIED, WHETHER STATUTORY OR OTHERWISE, INCLUDING ANY IMPLIED WARRANTY OR MERCHANTABILITY OR FITNESS FOR A PARTICULAR PURPOSE, MADE IN CONNECTION WITH ANY CONTRACT FORMED HEREUNDER. BUYER AGREES THAT SUCH FAILURE TO PAY SHALL CONSTITUTE A VOLUNTARY WAIVER OF ANY AND ALL SUCH WARRANTIES ARISING PURSUANT TO SUCH CONTACT.)

Visit www.tcf.com to view all of Twin City Fan & Blower's Installation Manuals and Fan Engineering Topics.

Fan & Blower
Twin City

TWIN CITY FAN & BLOWER | WWW.TCF.COM

5959 Trenton Lane N | Minneapolis, MN 55442 | Phone: 763-551-7600 | Fax: 763-551-7601